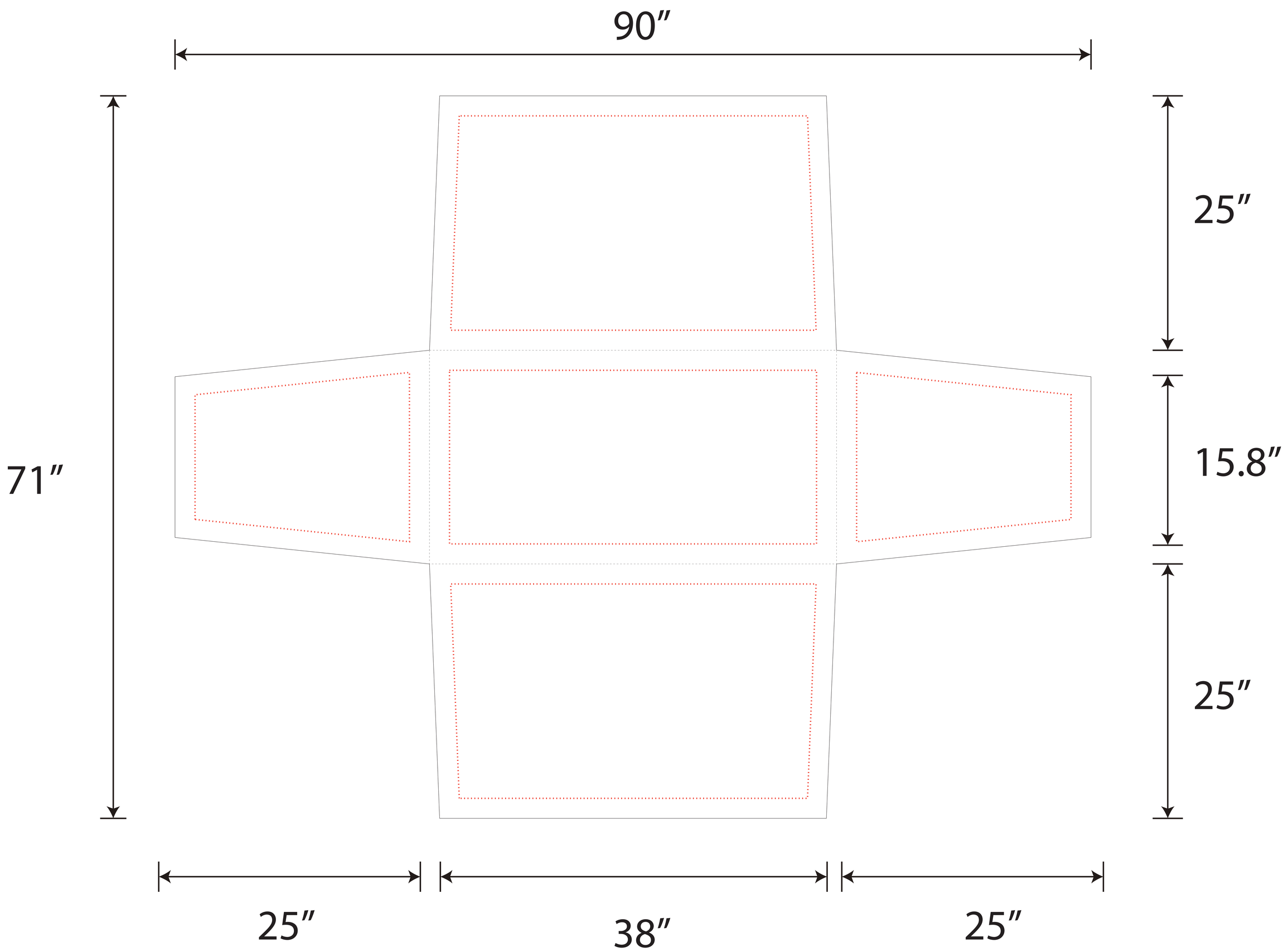

Tips: 1. Please put your main artwork inside the gray area
2. Please delete the layer before saving

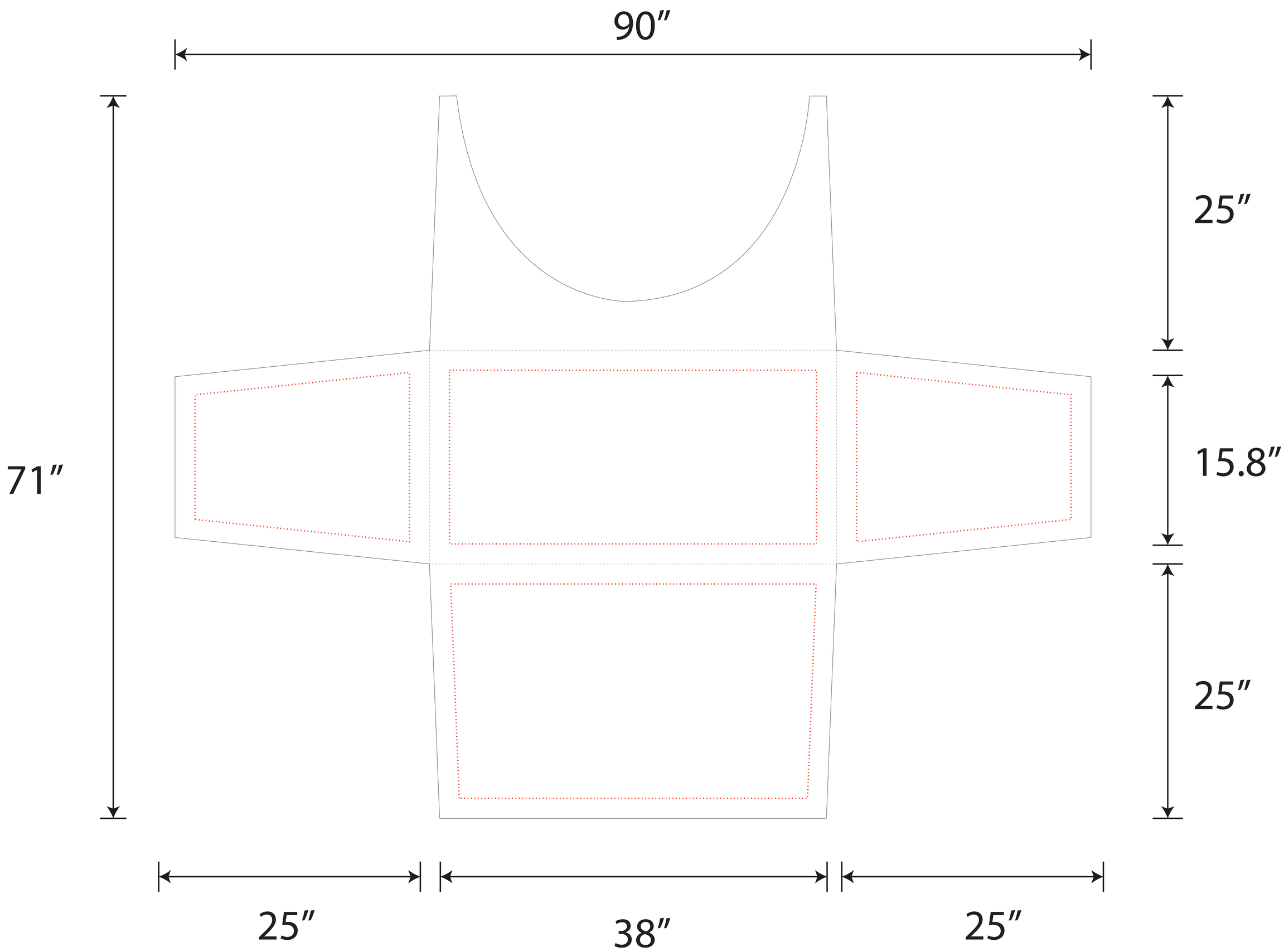

Tips: 1. Please put your main artwork inside the gray area
2. Please delete the layer before saving

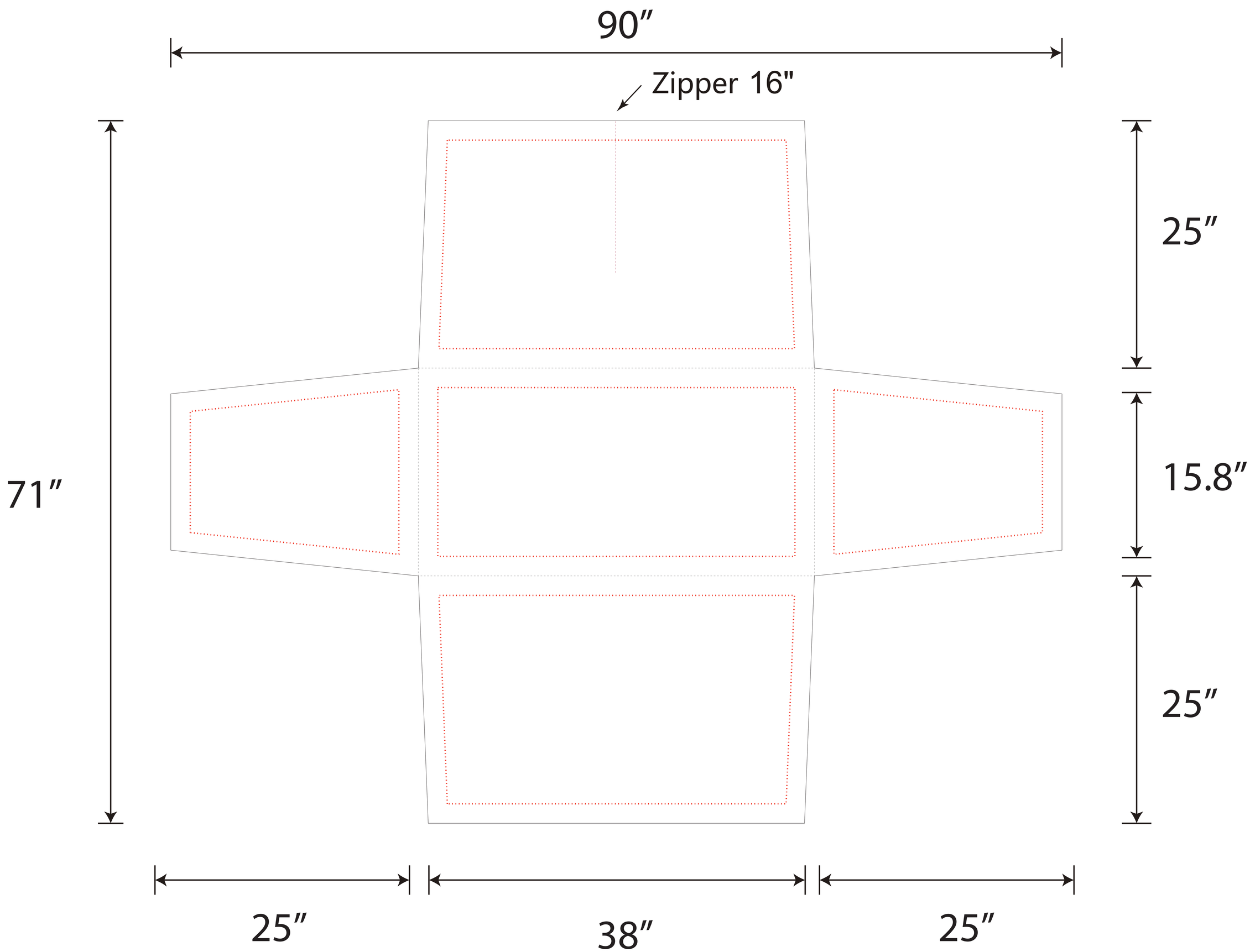

Tips: 1. Please put your main artwork inside the gray area
2. Please delete the layer before saving

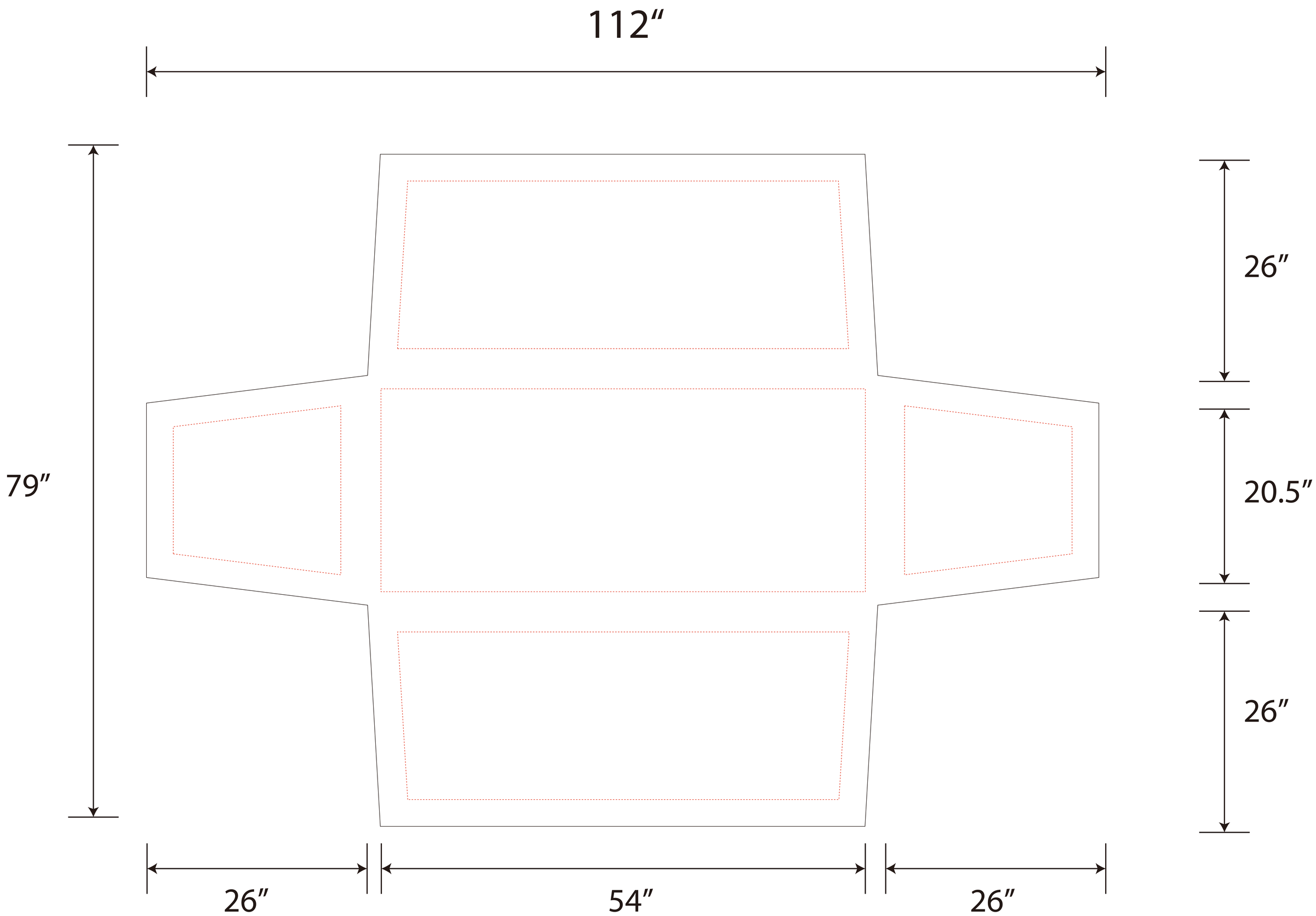
112″
79″
26″
20.5″
26″
26″
54″
26″

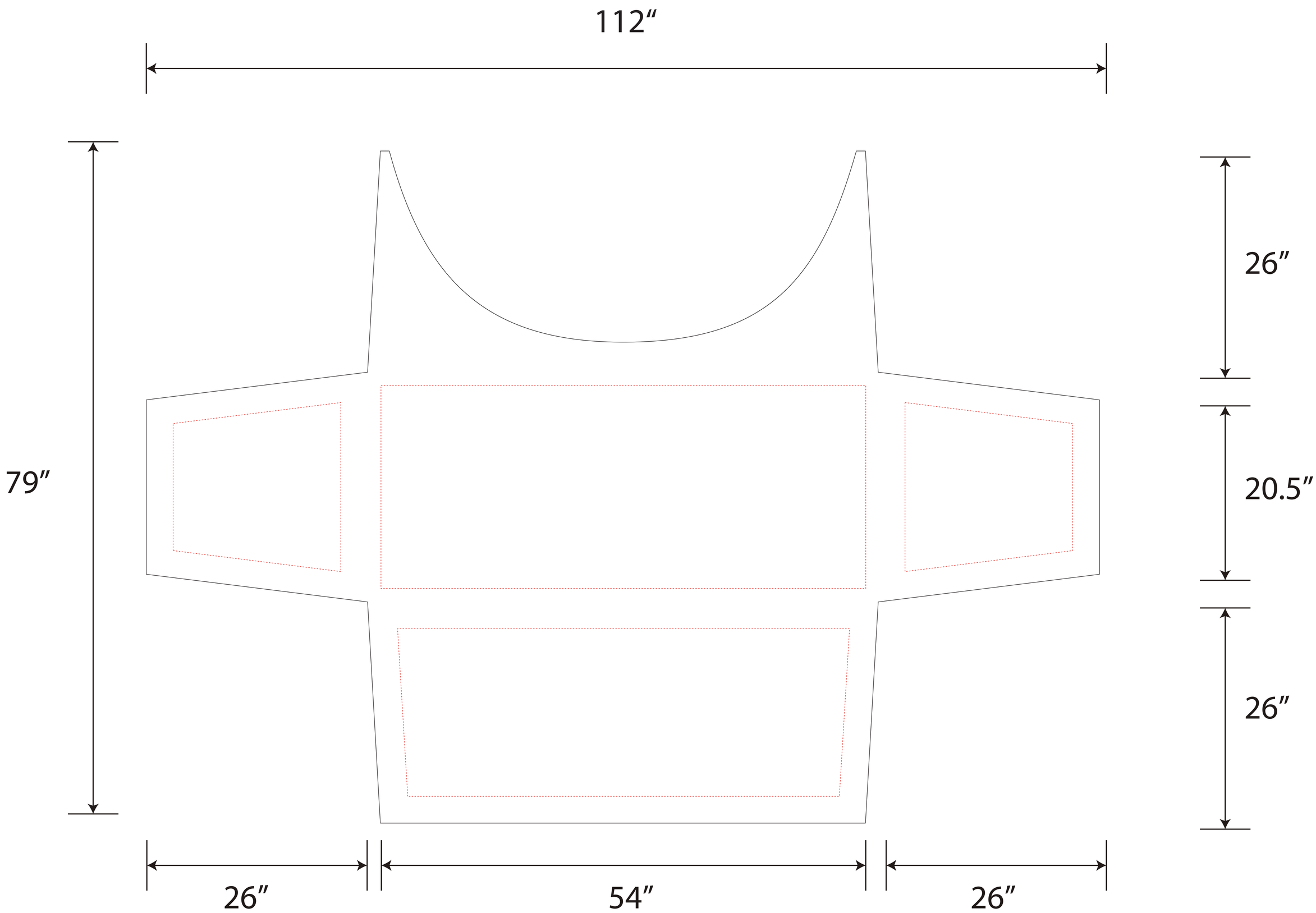

Tips: 1. Please put your main artwork inside the gray area
2. Please delete the layer before saving

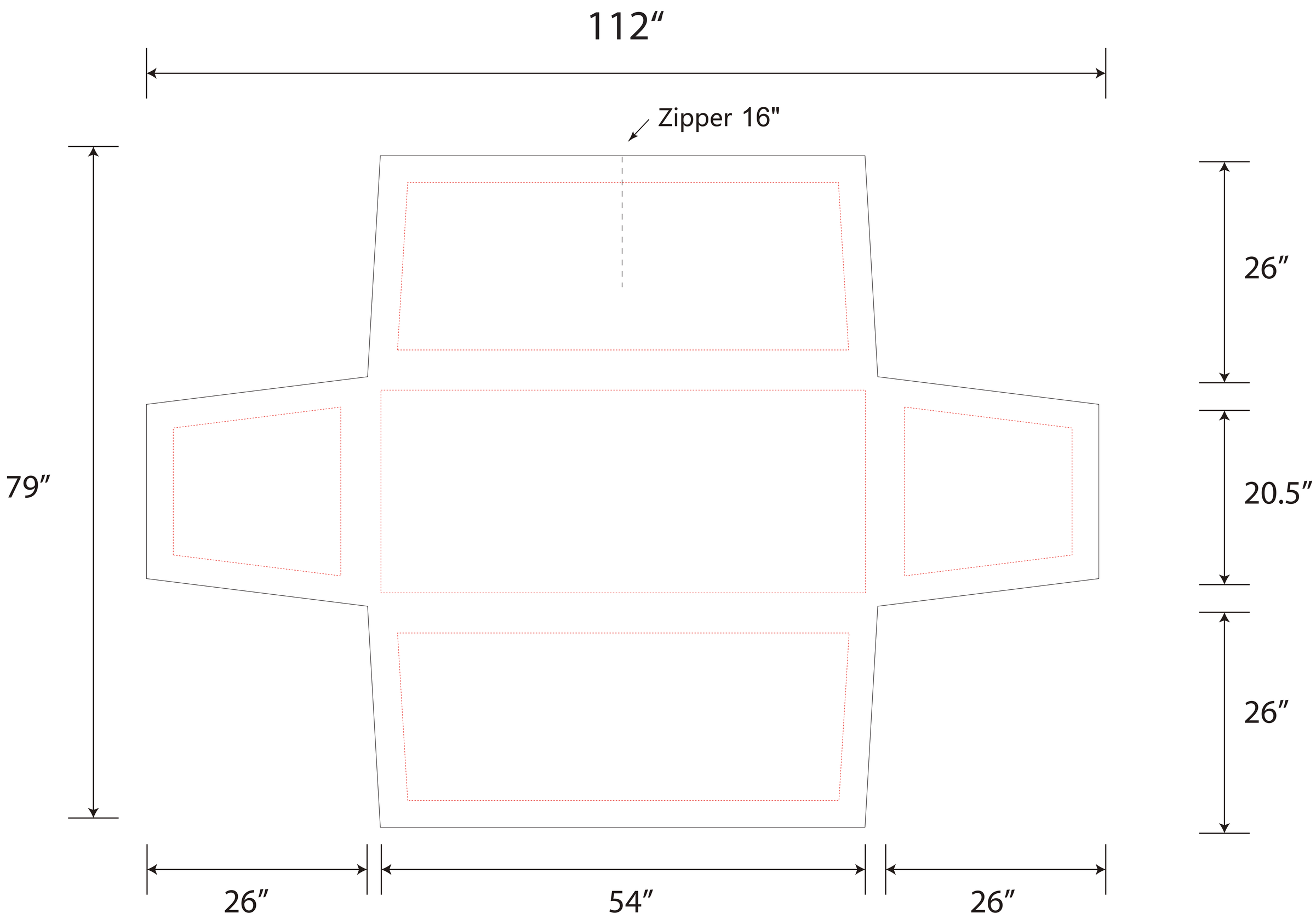
112″
Zipper 16"
79″
26″
20.5″
26″
26″
54″
26″

TCSSD-8

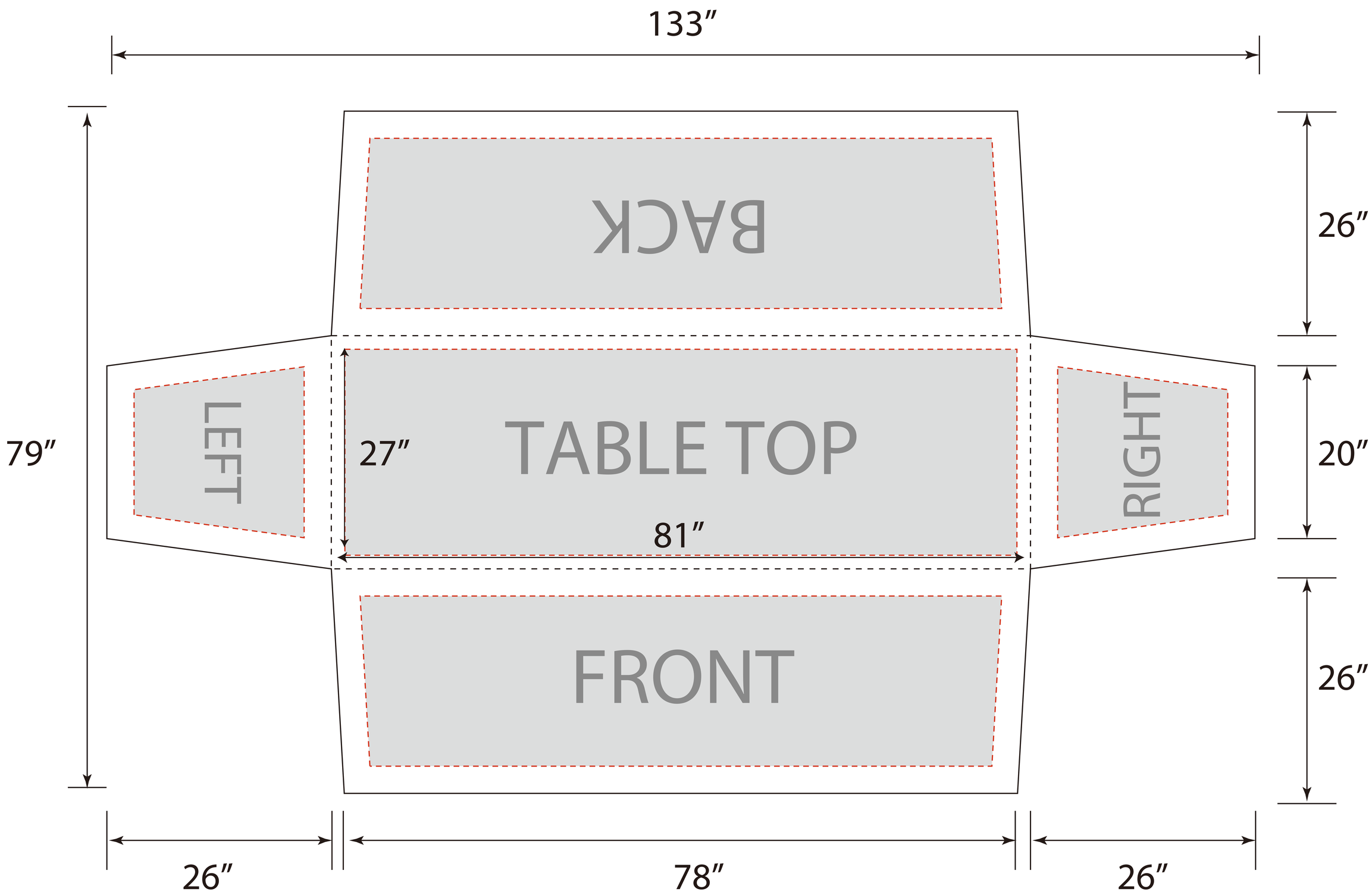

Tips: 1. Please put your main artwork inside the gray area
2. Please delete the layer before saving

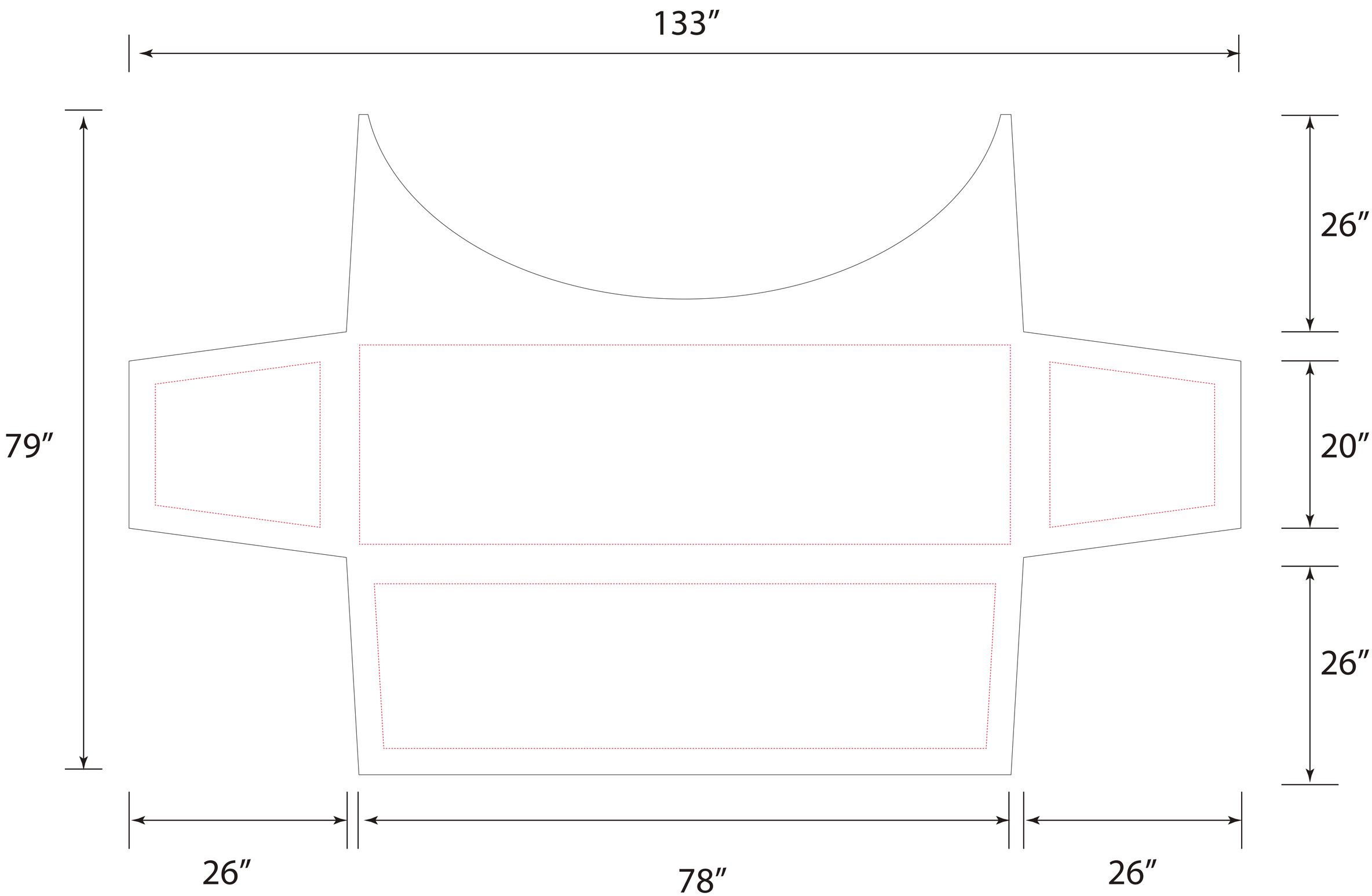
133″
79″
26″
20″
26″
26″
78″
26″

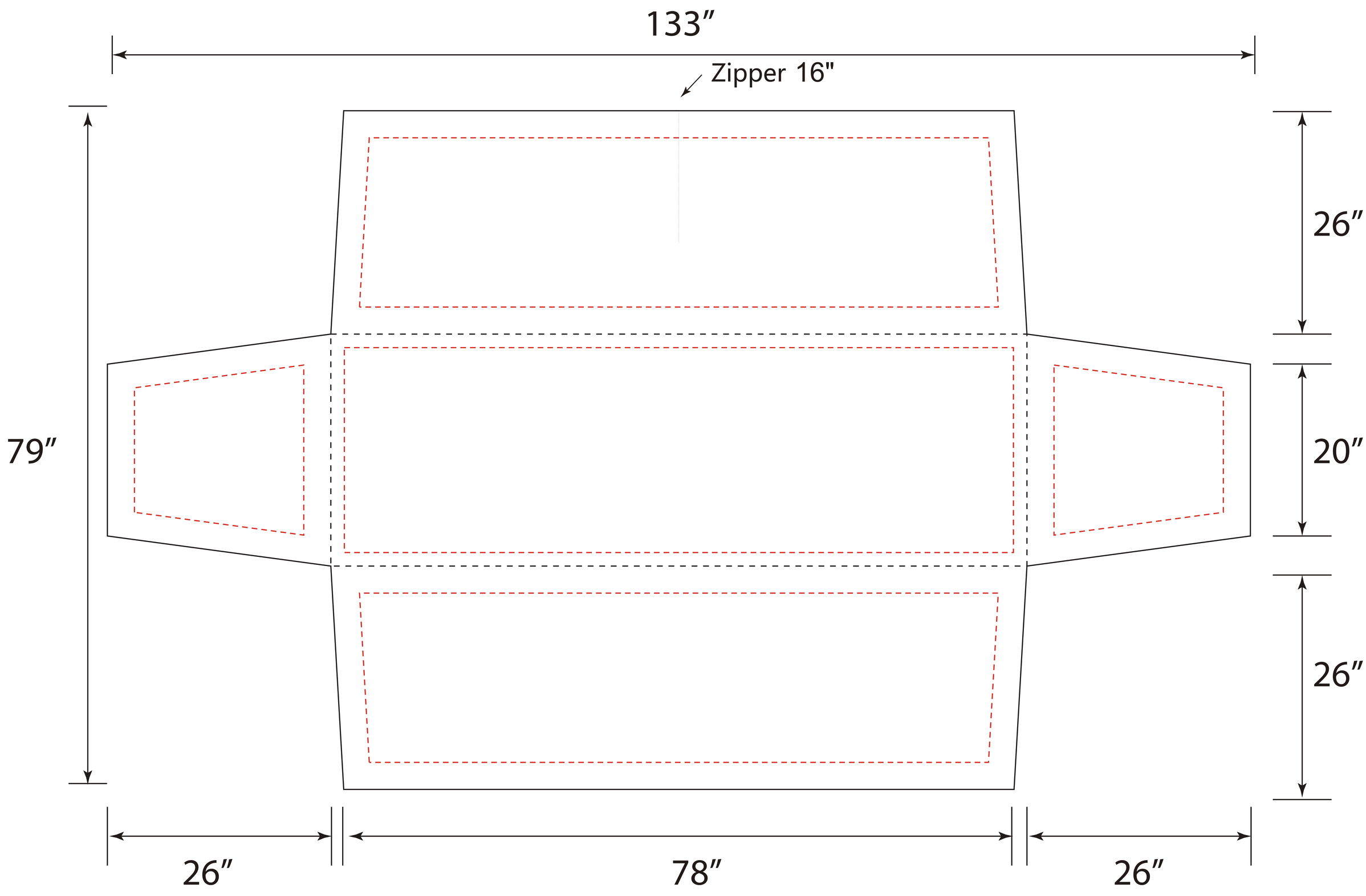

Tips: 1. Please put your main artwork inside the gray area
2. Please delete the layer before saving